System Engineering, Testing,
Development Services

FSC-1000 Fastek Soft-Controller

DO-178B Software Verification Using TestStand and the Fastek FSC-1000

***Fastek* International Ltd.** Fastek has developed a family of FSC-1000 software products to facilitate the use of National Instrument's TestStand in DO-178B based avionics software verification and validation (V&V) and Regression testing applications. During verification and validation, it is necessary to control the processor operation through the test executive, TestStand, to insert break points in the software under test to record the test results.

The FSC-1000 product family enables TestStand to programmatically control the operation of a variety of debuggers including:

BDMI, CA/EZTEST, CodeView, Cosmic, CodeWarrior, dbx, DDD, Eclipse, TotalView, GNU Debugger (GDB), Insight, IDA Pro, JSwat, Nemiver, MacsBug, OllyDbg, SoftICE, Turbo, WinDbg, Valgrind, ***and many others.***

The FSC-1000 can be tailored for a wide variety of microcontrollers including:

AMCC, Altera, Analog Devices, Atmel, Charmed Labs, Cypress , Dallas Semiconductor, EPSON, Freescale, Fujitsu, Holtek, Infineon, Intel, Lattice, Microchip, NEC, Parallax National Semiconductor, Philips, Rabbit, Renesas Technology, Silabs, Silicon Motion, STMicroelectronics, Texas Instruments, Toshiba, Western Design Center, Ubicom, Xemics, Xilinx, ZiLOG ***and others.***

Figure 1 is a block diagram representation of the FSC-1000's implementation.

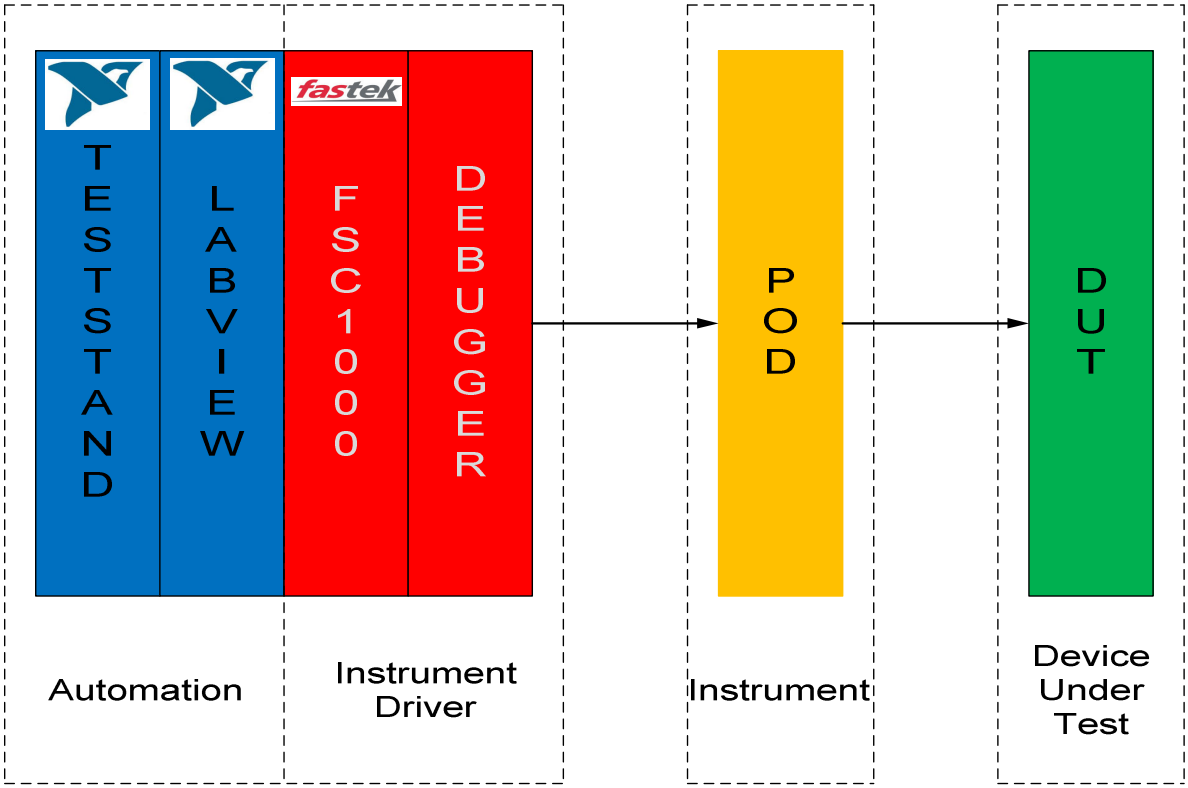

Block Diagram
Figure 1

FSC-1000 Attributes

- Easily adaptable to a wide variety of microprocessors and debuggers
- Easy to use and flexible product with breakpoint, memory read/write capabilities
- Modular debugger interface makes it easy to add new debugger interfaces
- Standard TestStand Interface
- Fully qualified for use in DO-178B Level A software verification and validation
- Reviewed and approved by Fastek's OEM customers
- Reviewed and approved by FAA's Designated Engineering Representatives (DER's)
- Will achieve first certification when Boeing's 787 is certified in 2009

Verification and Validation Set Up

A typical DO-178B based avionics software verification and validation set up block diagram is shown in Figure 2. A single PC controls the FSC-1000 and debugger interface as well as stimulus to the Device Under Test (DUT) through Fastek's CATS-1000 Configurable Automated Test Station. A snapshot of typical TestStand V&V test scripts and test results are shown in Figure 3.

Fastek can automate and customize microprocessor control for software and hardware development and totally automate V&V and Regression testing using the FSC-1000 for any microprocessor platform and hardware configuration.

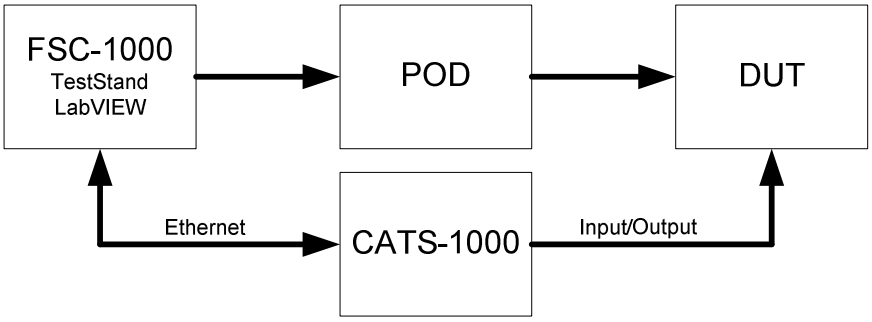

FSC-1000 V&V Test Setup
Figure 2

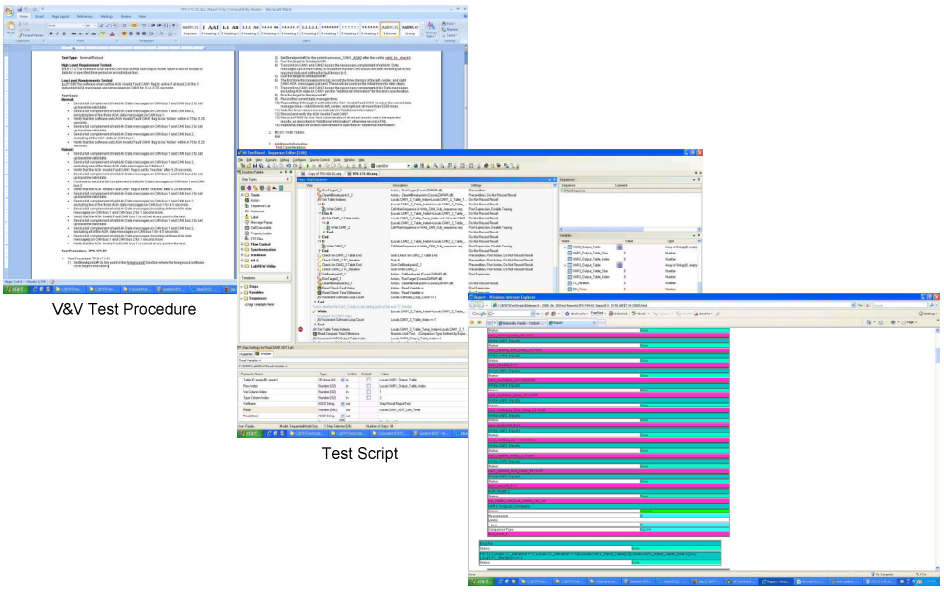

TestStand V&V Screenshots
Figure 3

©2005 National Instruments Corporation. All rights reserved. CVI, DIAdem, LabVIEW, TestStand, National Instruments, NI, and ni.com are trademarks of National Instruments.